Mini Project -3

Writeup

Project Title : Badminton Swing Analyzer using MPU6050

Team Members :

- Aswin Raaj .R
- Mani Balaji .S
- Tharun .V.S

Abstract:

The "Badminton Swing Analyzer using MPU6050" project aims to transform badminton training through cutting-edge technology. By integrating the MPU6050 sensor with ESP32 microcontroller, this sensor detects vital swing metrics, such as acceleration, swing speed, angular velocity. The acquired sensor data were transmitted to the ThingSpeak cloud platform, enabling players and coaches to visualize performance insights instantly. This non-intrusive solution empowers athletes to refine their techniques, enhance consistency, and optimize their training sessions, ultimately resulting in more effective training.

Components Required:

MPU6050 sensor, ESP32 microcontroller, 3.7v Li-ion Battery, TP4056 charging module

Methodology:

Using MPU6050 sensor along with esp32microcontroller,a Badminton Swing Analyzer is designed which helps in measuring swing speed, angular velocity, jerk, impact force. By integrating advanced filtering techniques such as Kalman filter, complementary filter data accuracy can be enhanced. The ESP32 is configured to connect to Wi-Fi, enabling transmission of data to ThingSpeak Cloud. ThingSpeak dashboards are developed to offer real-time visualization of swing metrics, enabling players to effectively track their progress.

Benefits:

- Enhanced performance tracking
- Improved technique for integrated coaching
- Visualization of performance
- Enhanced player’s training through data sharing

Mini Project -3

Writeup

Block Diagram:

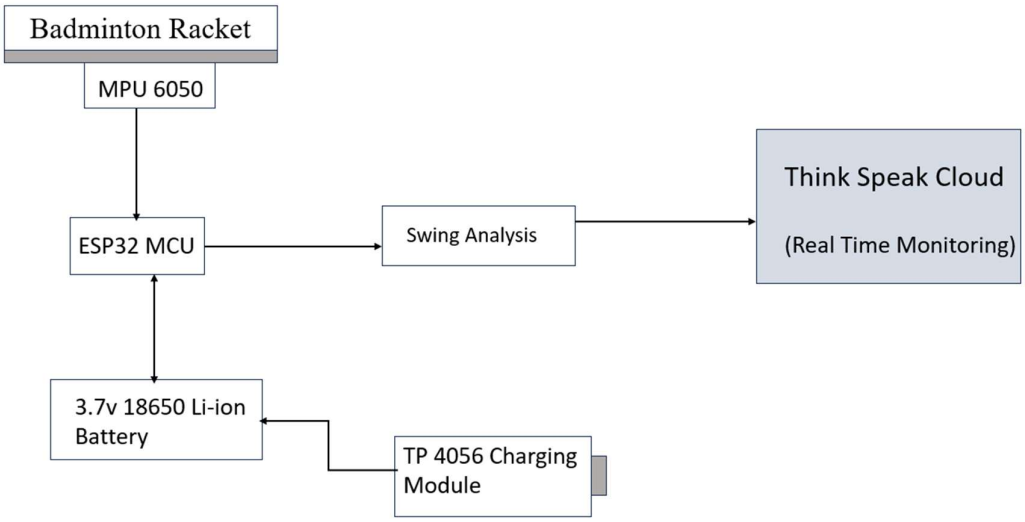

Fig. Badminton Swing Analyzer using MPU6050

Timeline:

Content	August				September				October				November	
	W-1	W-2	W-3	W-4	W-1	W-2	W-3	W-4	W-1	W-2	W-3	W-4	W-1	W-2
Literacy survey														
Purchase of components														
Hardware connection														
Result and execution														
Report submission														